Rosenberry's Septic Service

8885 Pineville Road, Shippensburg Pa 17257
Phone 717-532-4026 Fax 717-532-7229

250 Gallon Open Grease Trap

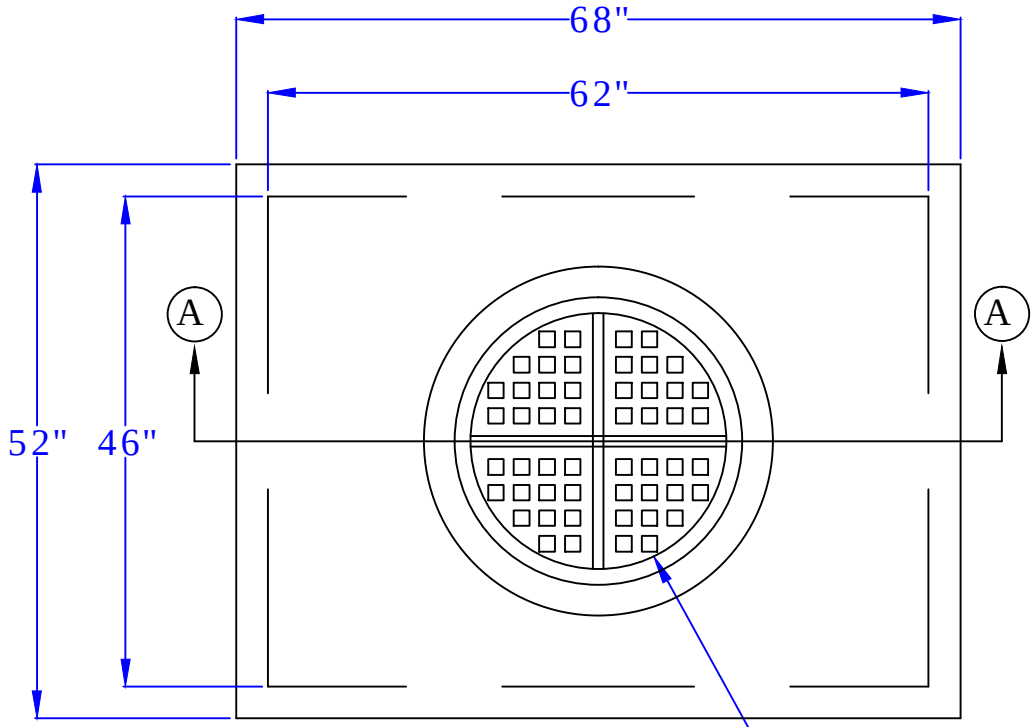

Plan View of Lid
Not To Scale

24" ID Cast Iron Frame & Heavy Duty Cover As Required By Local Authority

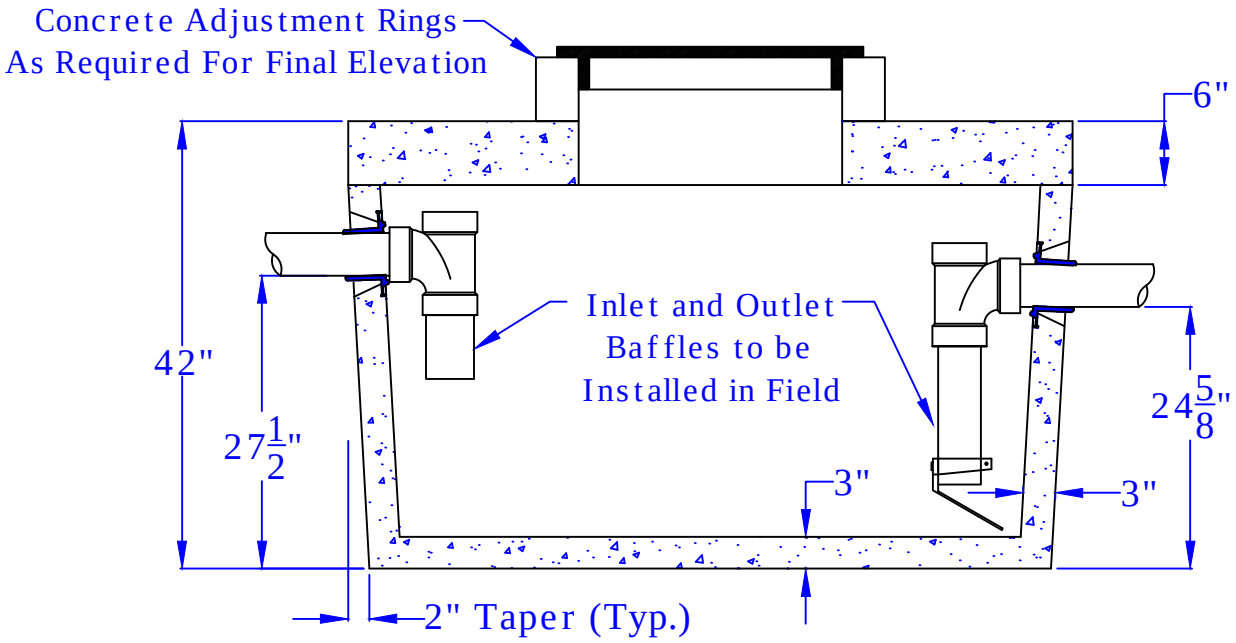

AA Section of 250 Gallon Grease Trap
Not To Scale

This drawing is for informational use only.
If you have any questions call Rosenberrys Septic Tank Service at 717-532-4026
Sept 2005, revised Feb 2011